IC INFORMATION
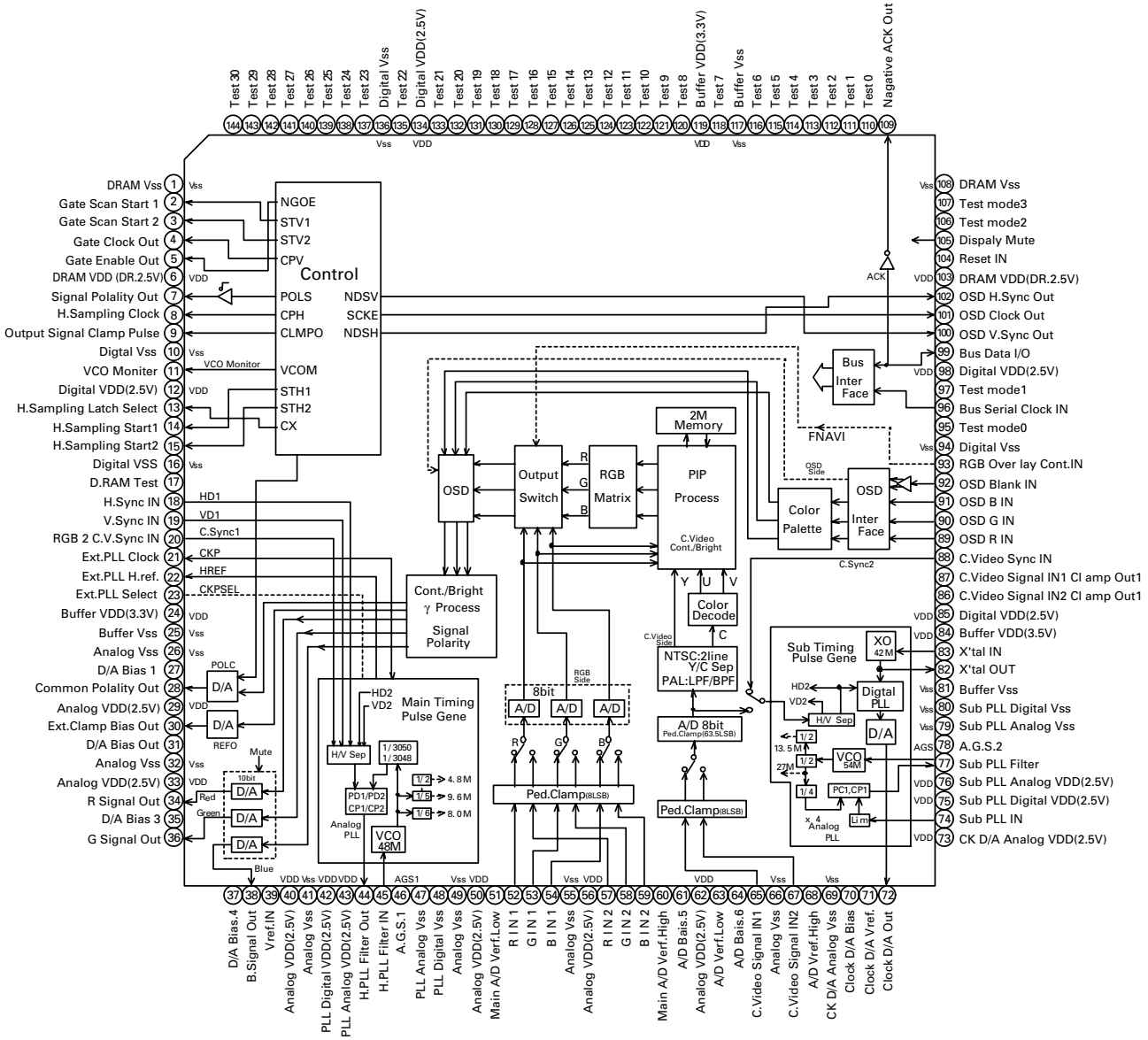
Function	TFT LCD Dual Screen Signal Processor	TC90A64F	1/1	J E
Type	C MOS	Model	AVIC-V07MD