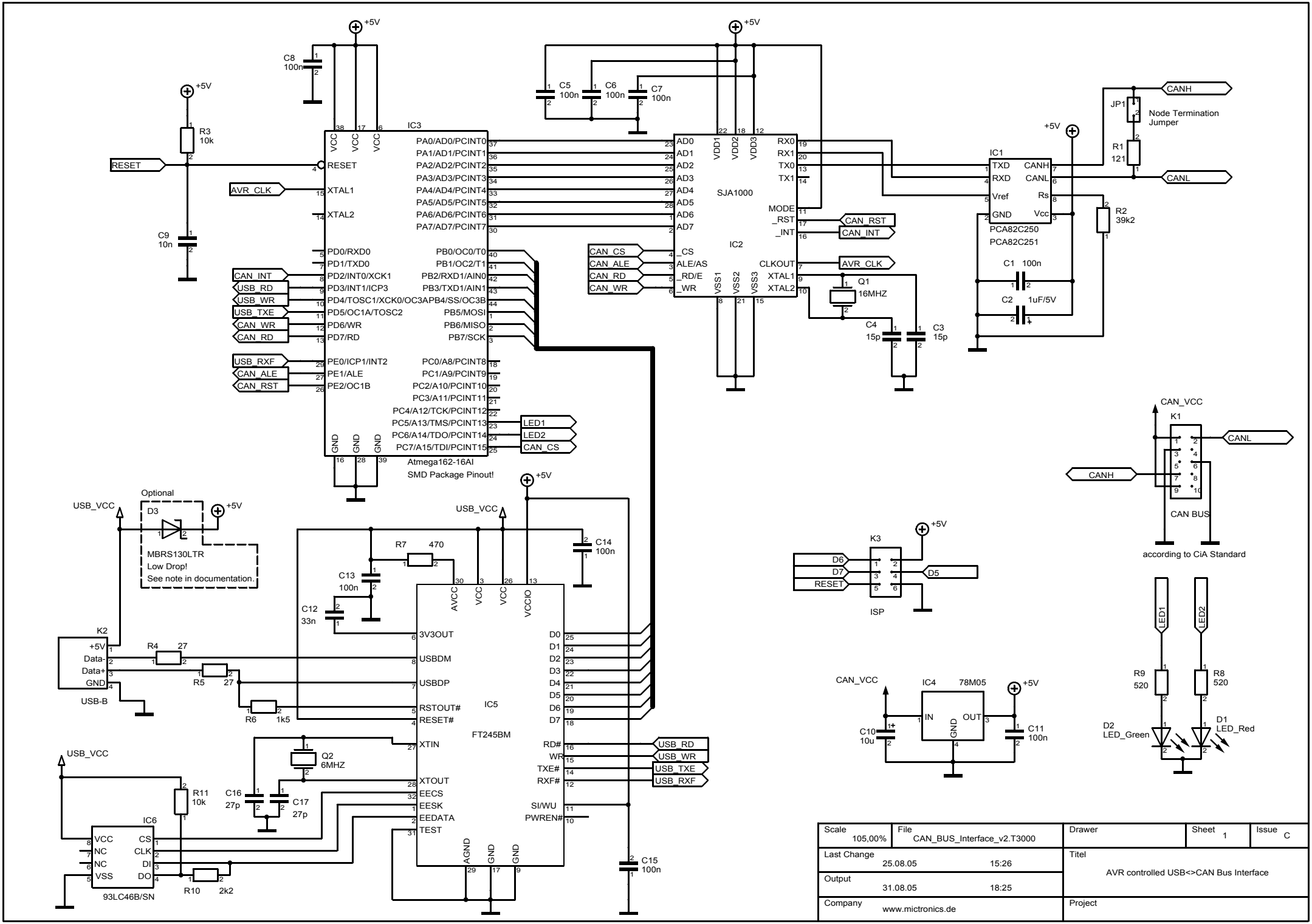

Scale	File	Drawer	Sheet	Issue
105,00%	CAN_BUS_Interface_v2.T3000		1	C
Last Change 25.08.05	15:26	Titel		
Output 31.08.05	18:25	AVR controlled USB<>CAN Bus Interface		
Company www.mictronics.de		Project		